# SHIMPO RK10 Reversing Switch configuration
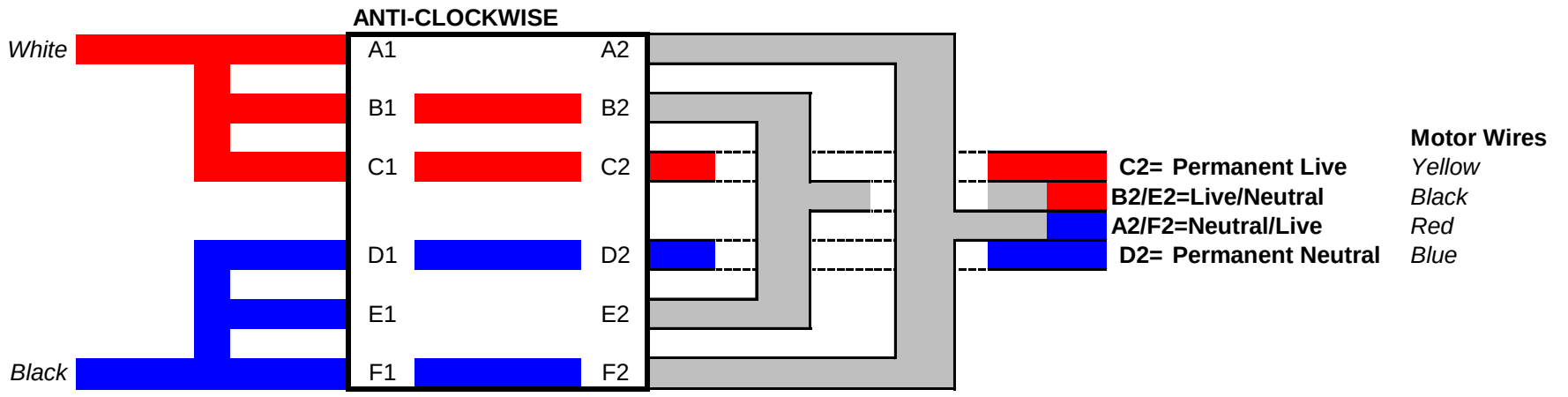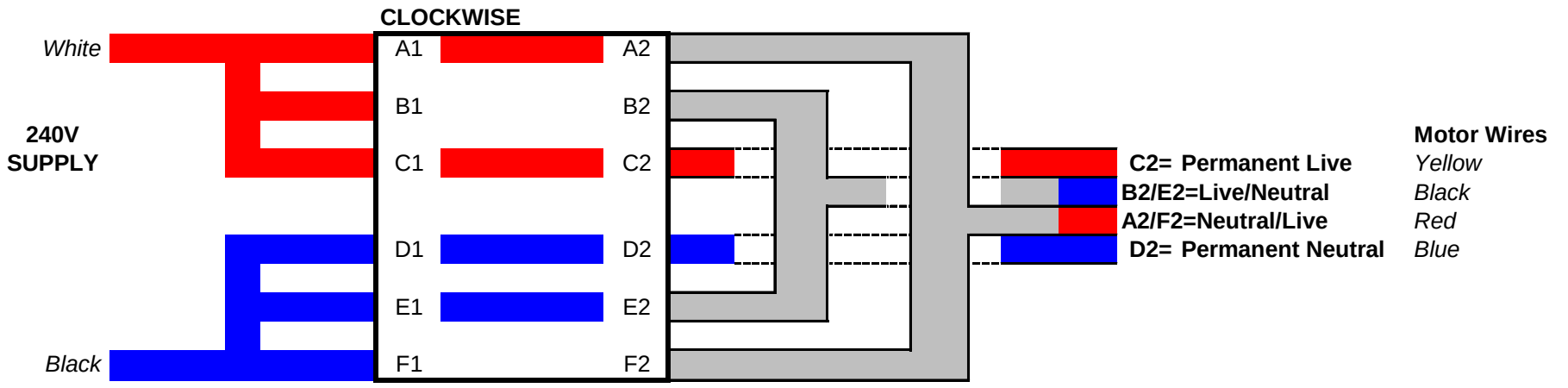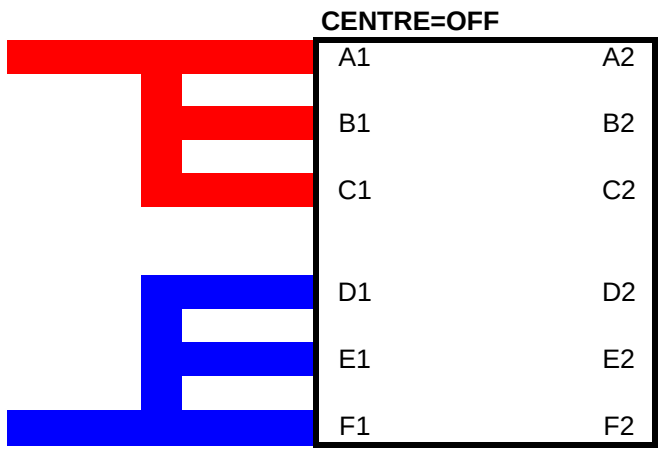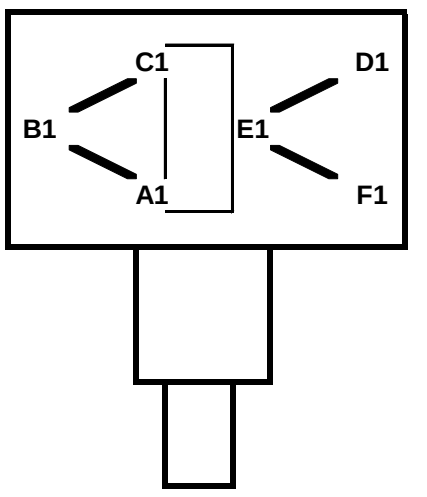
*Prepared 20/12/06*